NEW FORWARD TECHNOLOGY LIMITED
新科科技有限公司

Hong Kong Security Company
Licence **No. 2327**

INSTALLATION GUIDE · READ BEFORE INSTALLING

Solar Power Kit Installation Guide

Bracket-battery series solar kit for the New Forward Solar 4G PTZ Camera. Follow this guide step by step: where and how the panel is installed decides whether the camera keeps running.

Document **NF-SOLAR-IG-EN** · Version **1.0** · October 2026



Never mount upright
The battery housing has a breather vent — mount it as shown

Face due south
Longest exposure, strongest noon sun

No shade
Keep clear of buildings, trees and hills

Check the LEDs
Green = powered on, blue = charging

CONTENTS

02 Read this first
03 Choosing the site
04 Orientation & tilt
05 Installation steps
06 Activation & indicator lights
07–08 Safety, installers, records & support

www.newforwardtech.com (852) 2815 5056 admin@newforward.net

READ THIS FIRST

Three rules that decide whether the system works

A solar camera only runs as long as its battery is charged. A panel that is mounted wrongly, faces the wrong way or sits in shade cannot keep the system charged — a poorly sited installation is a wasted installation.

1 Never mount the main bracket upright



Main bracket standing upright on a post
The housing's breather vent is exposed — do not install this way.



Bracket arm fixed horizontally to the side of a pole
Camera mounted below; panel tilted towards the sun.

The main bracket must never be installed upright.
The housing of the main bracket has a breather vent. Always mount it exactly as shown in this guide — horizontally on the side of a pole or wall — and never stand the housing on end.

2 Face the panel due south

In Hong Kong a south-facing panel receives the longest daily sunlight and the strongest sun at noon. See page 04.

3 Keep the panel free of shade

Avoid buildings, trees and hillsides that block the sun at any time of day. See page 03.

✓ Remove the corner protectors

The panel ships with protectors on its four corners. Remove them before installing the panel.

Before you begin
Read the whole guide, including the safety warnings and installer requirements on page 07. If anything in the box is missing, damaged or of the wrong model, stop and contact New Forward before installing.


Illustration only

Parts referred to in this guide

- **Solar panel** — with protectors on its four corners
- **Solar panel bracket** — with angle scale (10°–45°)
- **Main bracket** — houses the battery compartment, compass and indicator lights
- **Bolt M8 × 95 mm and nut** — join the two brackets
- **2 × 350 mm hose clamps** — fix the bracket to a pole
- **Device output cable** (to the camera) and **charging cable** (from the panel)

CHOOSING THE SITE

Full sun, firm mounting, nothing in the way

Mount the kit on a pole or on a wall with an open view of the sky. Check where the shadows of nearby buildings, trees and hillsides fall during the day before you fix the position.

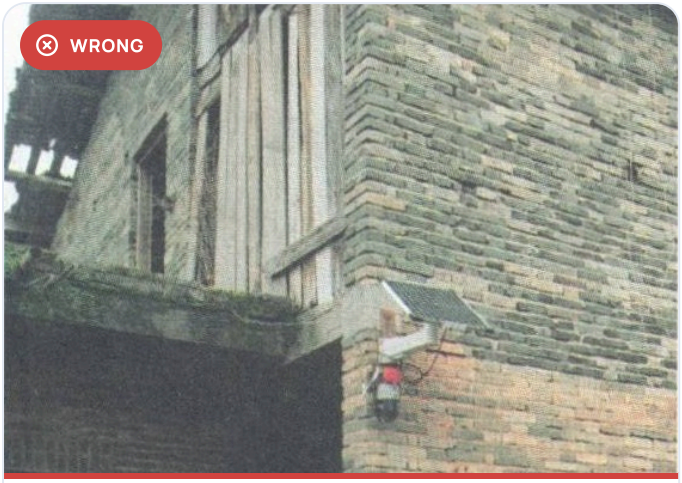

Shaded by a building
Walls and eaves block the sun for much of the day.



Shaded by trees
Leaves cover the panel and cut charging sharply.

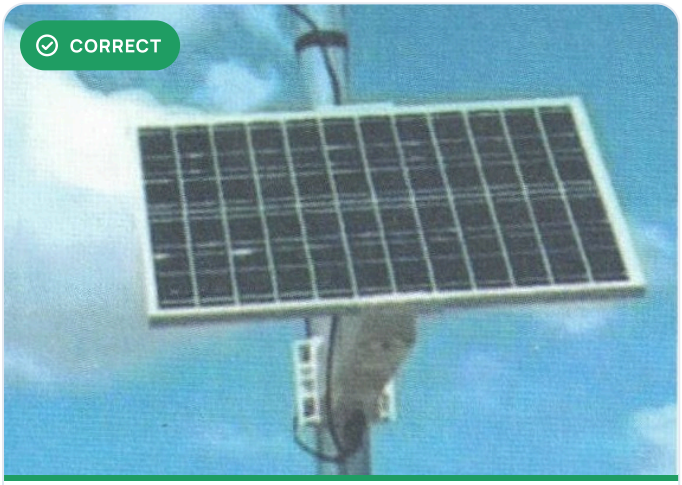

Pole mounting
Panel above surrounding obstacles, open sky.



Wall mounting with no obstruction
Bracket arm holds the panel clear of the wall.

Site checklist

- [ ] Use a compass to confirm the orientation before fixing the bracket.
- [ ] No shade from **tall buildings, trees or hillsides**.
- [ ] Well ventilated and dry; keep the area **free of debris, flammable and explosive materials**.
- [ ] Avoid **low-lying spots** where water may collect.
- [ ] Check the temperature and humidity at the site are within the battery's operating range (page 07).
- [ ] Fit a **bird deterrent** where necessary.

Working conditions

- [ ] Work only in **good weather with plenty of sunlight**, at temperatures **below 40 °C** and with no wind.
- [ ] Make sure the surrounding area is safe before starting.
- [ ] Use tools with **insulated sleeves**.
- [ ] For work at height, follow the applicable working-at-height rules and wear a **safety harness** and other protective equipment.
- [ ] Tools: Phillips screwdriver or Phillips power driver; spanner for the M8 bolt; a phone with a compass app.

ORIENTATION & TILT

The panel must face south

In the Northern Hemisphere the sun crosses the southern sky. A south-facing panel receives sunlight for the longest time each day and the strongest light at noon, when the sun is highest — so it generates the most power.

South — Best
Longest daily exposure and strongest noon sunlight — highest output.

East / West — ≈70–80%
Good sun only in the morning or afternoon; the noon sun strikes the panel at a shallow angle.

North — Do not use
Receives almost no useful sunlight in the Northern Hemisphere.

How to find south

1. Open the compass app on your phone, or use the compass on the main bracket.
2. Turn until the needle points to **S (180°)** — that is due south.
3. Fix the bracket with the panel facing south, **then** adjust the panel tilt.
4. Never lay the panel flat.



S = 180°

Balanced summer / winter charging
The kit maker recommends turning the panel about **10° west of due south**.

Tilt angle by latitude

15°	**Hong Kong & Macau — same zone as Guangdong**
15°	Yunnan, Guangdong, Guangxi, Fujian, Hainan
20°	Hunan, Jiangxi, Guizhou, Zhejiang, Sichuan, Chongqing
25°	Shanghai, Hunan, Anhui, Hubei, Sichuan
30°	Tibet, Henan, Shaanxi, Shandong, Jiangsu
35°	Beijing, Tianjin, Gansu, Shandong, Qinghai, Hebei, Shanxi, Jiangsu
40°	Xinjiang, Liaoning, Inner Mongolia, Jilin
45°	Heilongjiang, Inner Mongolia, Jilin

Reference values from the kit maker; fine-tune to the local latitude. A tilt that is **10° off** the recommended angle can cut charging efficiency by **15–20%**.


Panel installed facing south, tilted towards the sun

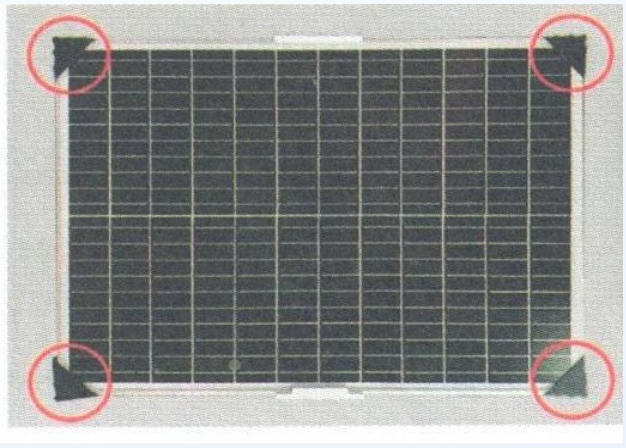
Corner protectors (circled) — remove before installation

Hong Kong quick setting
Confirm on site with a compass

FACING
South
about 10° west of due south

TILT
15°
angle scale on the bracket

SHADE
None
check at different times of day

INSTALLATION STEPS

Assemble the bracket, set the angle, fit the clamps

Bracket-battery series. Read each step in full before carrying it out, and check every fixing is tight before moving on.

1 Connect the panel bracket to the main bracket

Unpack the kit. Join the **solar panel bracket** to the **main bracket** with the supplied bolt and nut, as shown.

Bolt M8 × 95 mm · Nut

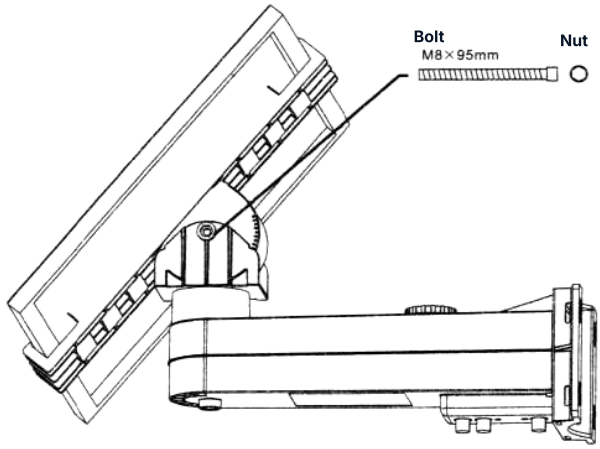

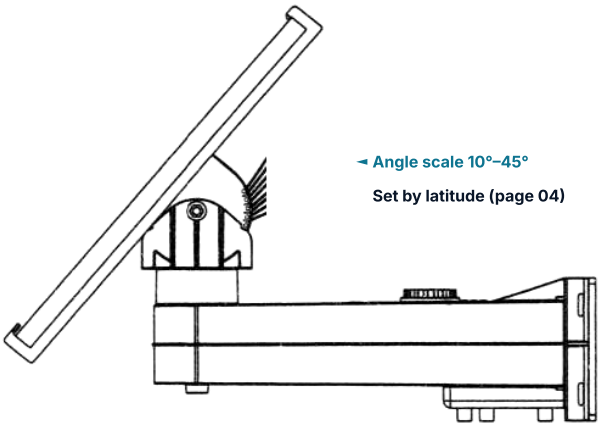

2 Set the tilt and orientation

Set the panel tilt for your location using the **angle scale on the side of the bracket** — **15° for Hong Kong** — then tighten the bolt. Use the **compass on the main bracket** to point the panel **due south**, clear of buildings and trees.

3 Thread the hose clamps

Thread the **two 350 mm hose clamps** through the bracket slots **in the order ① to ⑧** shown in the drawing. They will hold the bracket to the pole in step 5.

2 × 350 mm hose clamps

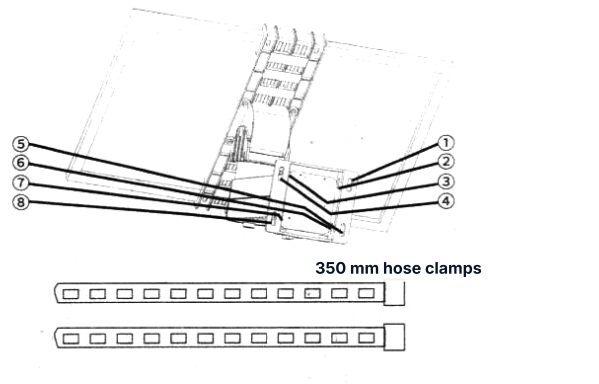

Connect, check the lights, fix to the pole

4 Connect the cables — in this order

The kit leaves the factory **activated**. Connect the cables in this order:

1. **First** plug in the **device output cable** (powers the camera). The **green** light comes on — the system is powered on.
2. **Then** connect the **charging cable** from the panel. The **blue** light comes on — charging is normal. The panel must face the sun.

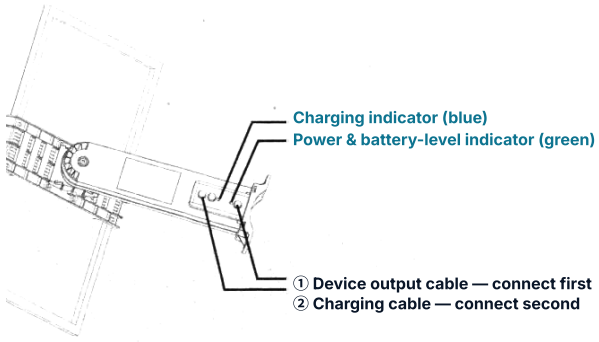

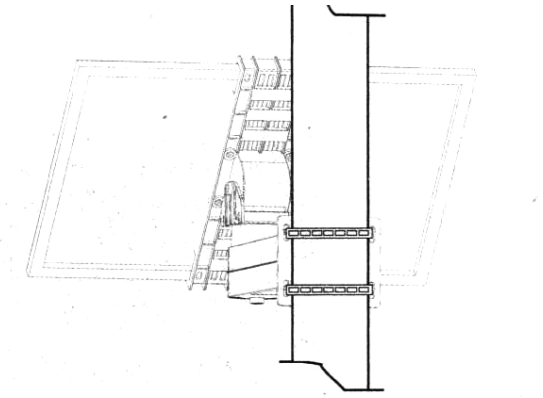

Fixing the solar bracket to the pole

5 Fix the bracket to the pole

Offer the bracket up to the pole and tighten the two hose clamps with a **Phillips screwdriver** or **Phillips power driver**. Check the bracket cannot twist or slip, and that the main bracket is **horizontal — never upright**.

> ⚠ **After installation**
> Check every part is tight and secure, the panel is not shaded, and the camera (load) works normally.

i Indicator lights

Blue	**Charging indicator.** On = charging from the panel. Off = not charging.
Green	**Power indicator.** Flashes show the battery level — each flash is 10%: **6 flashes = 60%**, **8 flashes = 80%**, and so on.
Red	**Battery low.** The green light turns red when the battery is running low.

? Quick checks

Green light stays off	Check the **device output cable** is fully plugged in (step 4). If it still stays off, contact New Forward.
Blue light off in daylight	Check the **charging cable** connection, and that the panel **faces south and is not shaded**.
Red light comes on	The battery is low. Re-check **orientation, tilt and shade** (pages 03–04) and let the panel recharge the battery in sunlight.

SAFETY & INSTALLERS

Battery safety warnings

Any of the following can destroy the charging circuit and battery pack and create a safety hazard. Damage caused by them is not covered by the warranty.

- Do not **soak or immerse** the battery housing in water.
- Do not connect **other solar panels** or a panel of a higher rating — a mismatched panel damages the charging circuit and battery.
- Do not mount the battery compartment or its bracket **upside down or upright**. Do not knock, throw, step on or bend the equipment.
- Do not **short-circuit the output** and do not wire while live.
- To charge the battery box on its own, use **only the lithium-ion charger of the specified model**. Never charge it from any other power source.
- Do not **puncture, strike** or subject the battery housing to mechanical shock.
- Do not **dismantle or weld** the battery pack.
- Do not operate the kit **outside the temperature range** in its specification.
- Do not connect several solar kits **in parallel or in series**.
- Do not short or **reverse the battery's positive and negative** terminals.
- Keep the battery housing away from **heat sources and open flame**. Never put the battery into a fire, furnace or other high-temperature place — it may explode or leak flammable liquid or gas.
- Do not replace the battery pack or the charge/discharge circuit **without authorisation** — the safety protection may fail.

If the battery overheats, smells, leaks or changes shape

Stop using it immediately if it heats up, gives off an odour, discolours, deforms or shows any other abnormality during installation or commissioning. If it leaks or gives off a pungent smell, move away at once and contact New Forward.

Operating temperature

Charging: **−20 °C to 45 °C**
Discharging: **−20 °C to 55 °C**

Storage over 3 months

Store at **−20 °C to 30 °C** with the battery **40–60% charged**. Recharge **every 6 months** to protect battery life.

Transport

Ship boxed. Avoid strong vibration, impact, crushing, sun and rain. Any vehicle, train or ship may be used.

Damaged packaging

If a carton is damaged, punctured or torn so that the battery is exposed, inspect the goods, confirm the battery is undamaged, and repack it before further handling.

Installer requirements

- [ ] A qualification or experience in installing and maintaining video surveillance systems, plus any qualification required for the related work (e.g. working at height).
- [ ] Basic knowledge of video surveillance systems and their components, and the skills to install them.
- [ ] Basic knowledge and practical skills in low-voltage wiring and electronic circuit connection.
- [ ] Basic network security knowledge, and the ability to read and understand this guide.

About this guide

This guide describes the solar power kit supplied by New Forward Technology Limited. It is for guidance only and may differ from the actual product — the product supplied prevails. We recommend using it under the direction of qualified personnel. Read it before using the product and keep it for future reference.

To the maximum extent permitted by law, this guide is provided "as is". Use the product in accordance with applicable laws and regulations. Where this guide conflicts with applicable law, the law prevails. After-sales service and warranty are provided by New Forward in accordance with your supply or maintenance agreement.

RECORDS & SUPPORT

Installation record and routine checks

✓ Installation & handover record

Project / site			
Kit model / serial no.		Camera serial no.	
Mounting	☐ Pole ☐ Wall	Orientation / tilt	Facing _____° Tilt _____°
Checks	☐ Bracket horizontal, not upright ☐ No shade ☐ Corner protectors removed ☐ Green on ☐ Blue on ☐ Camera working		
Battery at handover	Green light flashes _____ times (= _____ %)		
Installed by / date		Inspected by / date	

↻ Routine inspection log

Date	Panel clean & unshaded	Bracket & clamps tight	Lights (green / blue / red)	Remarks	Checked by
	☐	☐			
	☐	☐			
	☐	☐			
	☐	☐			
	☐	☐			

Support from New Forward Technology

Licensed security company
HK Security Company Licence No. 2327 — supply, installation & maintenance.

Call us
2815 5056 · 2618 5055 · 9405 8300
Mon–Fri 09:30–18:00

Email & web
admin@newforward.net
www.newforwardtech.com

New Forward Technology Limited · 新科科技有限公司
40/F, Montery Plaza, 15 Chong Yip Street, Kwun Tong, Kowloon, HK · 觀塘創業街15號萬泰利廣場40樓
2815 5056 · 2618 5055 · 9405 8300
admin@newforward.net
www.newforwardtech.com

New Forward Technology Limited is an independent systems integrator; the solar power kit is a third-party component and all trademarks belong to their respective owners. Specifications and illustrations are for reference and subject to change without notice. Reference tilt values and efficiency figures are supplied by the kit maker. © 2026 New Forward Technology Limited.